由 Autodesk 教育版产品制作

| REV. | ECN.NO. | MODIFY.CONTENT | DATE |
|---|---|---|---|
| A | | NEW | 2011/10/31 |

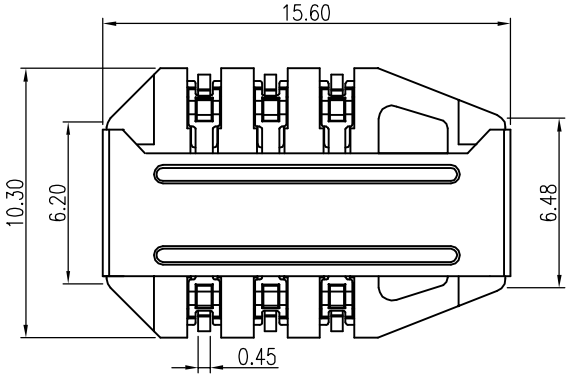


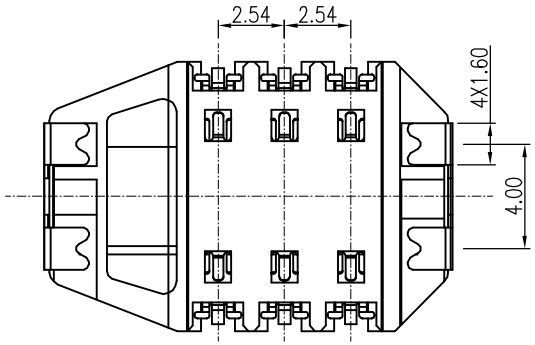


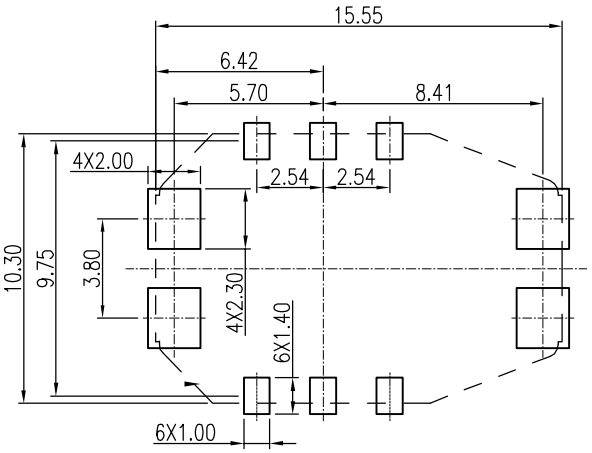


RECOMMENDED P.C.B LAYOUT
TOLERANCE ±0.05MM

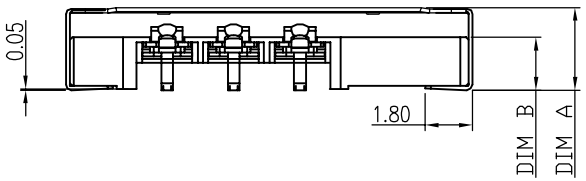


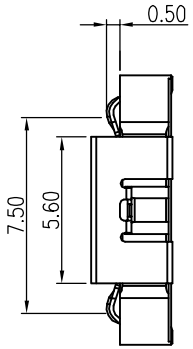


NOTES:
1. MATERIAL:
   1.1 Housing:High Temperature Thermoplastic UL94V-0; Color Black.
   1.2 Terminal:Copper Alloy.
   1.3 Sheel:Stainless Steel
2. SPECIALITY:
   2.1 Rated current:0.5A
   2.2 Rated voltage:30V
   2.3 Contact Resistance:50mΩ MAX
   2.4 Insulation Resistance:100MΩ MIN 100V DC
   2.5 Dielectric withstanding voltage: 100V AC.
   2.6 Solder ability:245±5℃, 5±0.5s.
   2.7 Durability:5000 Cycles Min.
   2.8 Operating condition:Temperature: -30℃~+80℃; Humidity: 80% R.H MAX

| PART NO. | DIM A | DIM B | NOTE |
|---|---|---|---|
| JYS-SIM310-034 | 3.10 | 2.00 | H=3.1 |
| JYS-SIM290-033 | 2.90 | 1.80 | H=2.9 |
| JYS-SIM270-032 | 2.70 | 1.60 | H=2.7 |
| JYS-SIM240-031 | 2.40 | 1.30 | H=2.4 |
| JYS-SIM210-030 | 2.10 | 1.00 | H=2.1 |

| GENERAL TOLERANCE | | | |
|---|---|---|---|
| X.±0.25 | x.°±5° | | |
| .X±0.20 | .x°±2° | | |
| .XX±0.15 | .xx°±1° | | |
| .XXX±0.08 | .xxx°±0.5° | | |
| SHEET | 1/1 | | |

| | | | | | |
|---|---|---|---|---|---|
| DWG NO. | JYSA1305-07 | APPD: | WIND | Scale | 1:1 |
| Title | 菱型 SIM CARD 连桥 2.1-3.1H | CHKD: | | UNIT | mm |
| | | DR: | | | |
| Part NO. | SEE TABLE | Date | 2012/02/29 | | |

杰 宇 森 电 子 有 限 公 司
JIE YU SEN ELECTRONIC CO., LTD.

由 Autodesk 教育版产品制作